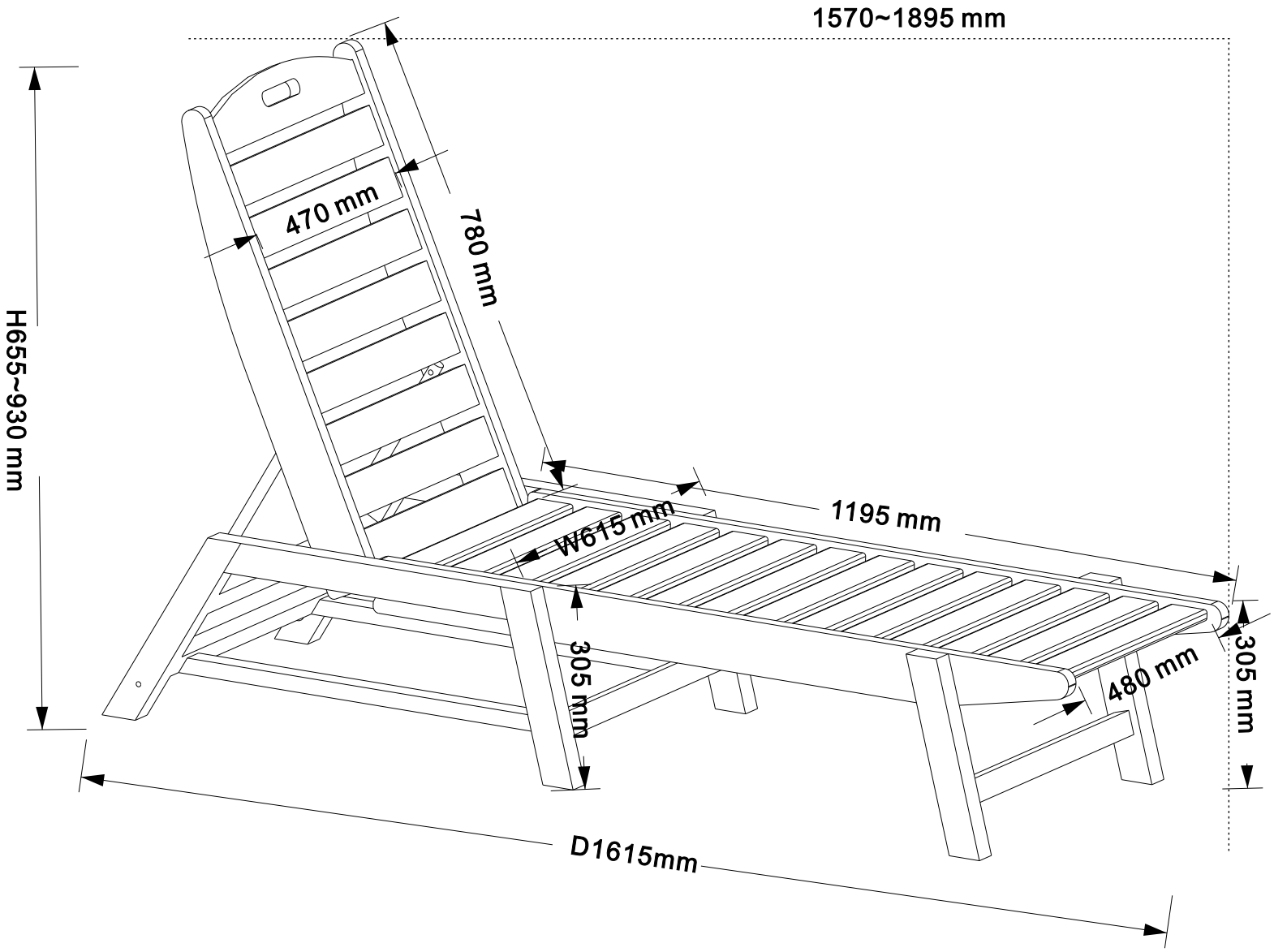
1570~1895 mm
470 mm
780 mm
H655~930 mm
W615 mm
1195 mm
305 mm
480 mm
305 mm
D1615mm

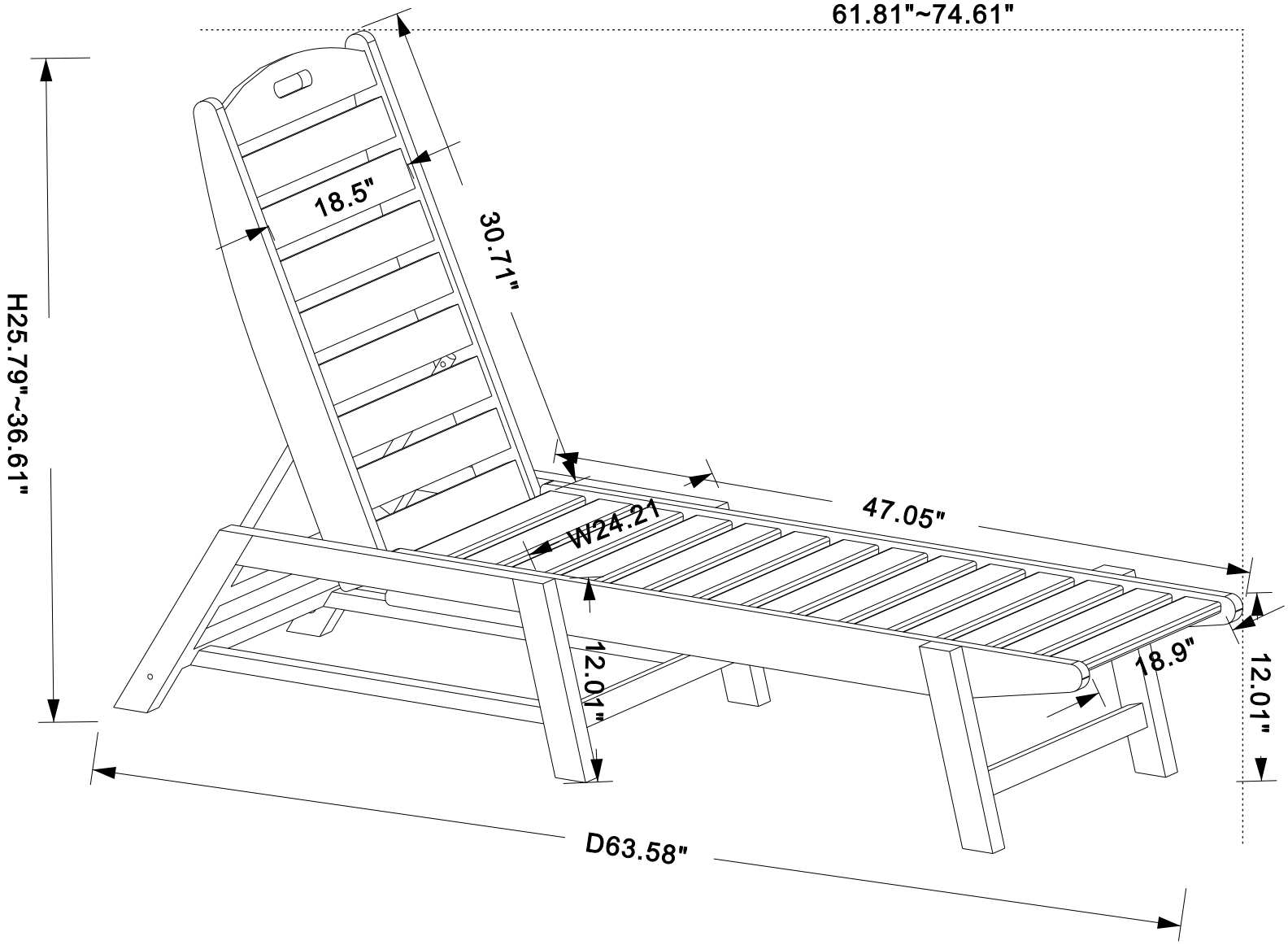
61.81"~74.61"
18.5"
30.71"
H25.79"~36.61"
47.05"
W24.21
12.01"
18.9"
12.01"
D63.58"